COUNTY OF SAN JOAQUIN

DEPARTMENT OF PUBLIC WORKS
P.O. BOX 1810-1810 E. HAZELTON AVENUE
STOCKTON, CALIFORNIA 95201
(209) 468-3000
FAX # (209) 468-9324

Permit No: **PS-1502426**
Date Issued: 09/01/2015
Start Date: 09/01/2015
Exp. Date: 09/15/2015
Project No: PWP730077
Quad: NE

UE/CR/PM NO:8258

ENCROACHMENT PERMIT

To: CALIFORNIA WATER SERVICE
1602 E LAFAYETTE ST
STOCKTON, CA 95205

Encroachment Type:

Trench	Bell Hole		

Location:
S/S OF MARIPOSA RD. AT STAGECOACH RD.

In compliance with your request of **09/01/2015**, permission is hereby granted to do work in County right-of-way as shown on attached application and subject to all the terms, conditions and restrictions written below or printed as general or special provisions on any part of this form. See reverse side and attached sheet, if any.

Trench excavations for service connections will not be permitted within ten feet (10') of pavement centerline unless otherwise approved by the Director. Surface of trench patches shall match in kind and be smooth and even with that of abutting surface. Special attention shall be given to depth of utilities through roadside area in anticipation of future drainage facilities, road profile and/or frontage development. All underground utility facilities are to be established and accurately dimensioned on sketches from surveyed centerline of road right of way, or from right of way (border) lines.

Permittee shall call the Department of Public Works, Field Engineering Division (Permit Inspections) at (209)953-7421 at least forty-eight hours prior to beginning any work within the County right of way. All work performed under this permit shall conform to the rules and regulations pertaining to safety established by the California Division of Industrial Safety and Cal-OSHA.

The jobsite shall be kept in a safe condition at all times by the daily removal of any excess dirt or debris which might be a hazard to either pedestrian or automobile traffic. All necessary traffic convenience and warning devices and personnel shall be provided, placed and maintained by and at the sole expense of the Permittee in accordance with the latest edition of the CALTRANS Manual of Traffic Control.

After completion of the work permitted herein, all debris, lumber, barricades, or any excess material shall be removed and the jobsite left in a neat workmanlike manner. Immediately following completion of construction permitted herein, Permittee shall fill out and mail notice of completion (see attached post card) provided by Grantor.

Special Comments:

Traffic Control Per MUTCD
CONSTRUCTION AREA TRAFFIC CONTROL PLAN PER MUTCD
PAVEMENT RESTORATION PER LETTER DATED AUGUST 28, 2015

FORMS:

SS/WW, R-29		

Est. Permit Fee: $436.00

MIKE SELLING, Deputy Director
Department of Public Works

By: _____
Permit Section

WHITE	-Permittee
GOLDENROD	-PWD Central File
YELLOW	-Field Inspection
PINK	-Permit Section

ENCROACHMENT PERMIT GENERAL PROVISIONS

13-1

1. This permit is issued under and subject to all laws and ordinances of agencies governing the encroachment herein permitted. See the following references:
   STREETS AND HIGHWAYS CODE
   1. Division 1, Chapter 3
   2. Division 2, Chapter 2, Section 942
   3. Division 2, Chapter 4, Section 1126
   4. Division 2, Chapter 5.5 and Chapter 6

   SAN JOAQUIN COUNTY ORDINANCES NUMBERED: 324, 441, 648, 662, 672, 695, 700, 860, 892, 3359, and 3675.

2. It is understood and agreed by the Permittee that the performance of any work under this permit shall constitute an acceptance of all the provisions contained herein and failure on the Permittee's part to comply with any provision will be cause for revocation of this permit. Except as otherwise provided for public agencies and franchise holders, this permit is revocable on five days notice.

3. All work shall be done subject to the supervision of and the satisfaction of the grantor. The Permittee shall at all times during the progress of the work keep the County Highway in as neat and clean condition as is possible and upon completion of the work authorized herein, shall leave the County Highway in a thoroughly neat, clean and usable condition.

4. The Permittee also agrees by the acceptance of this permit to properly maintain any encroachment structure placed by the Permittee on any part of the County Highway and to immediately repair any damage to any portion of the highway, which occurs as a result of the maintenance of the said encroachment structure, until such time as the Permittee may be relieved of the responsibility for such maintenance by the County of San Joaquin.

5. The Permittee also agrees by the acceptance of this permit to make, at its own expense, such repairs as may be deemed necessary by the County Department of Public Works.

6. It is further agreed by the Permittee that whenever construction, reconstruction or maintenance work upon the highway is necessary, the installation provided for herein shall, upon request of the County Department of Public Works, be immediately moved or removed by and at the sole expense of the Permittee.

7. No material used for fill or backfill in the construction of the encroachment shall be borrowed or taken from within the County right of way.

8. All work shall be planned and carried out with as little inconvenience as possible to the traveling public. No material shall be stacked within eight feet (8') of the edge of the pavement or traveled way unless otherwise provided herein. Adequate provision shall be made for the protection of the traveling public. Traffic control standards shall be utilized including barricades; approved signs and lights; and flagmen, as required by the particular work in progress.

9. The Permittee, by the acceptance of this permit, shall assume full responsibility for all liability for personal injury or damage to property which may arise out of the work herein permitted or which may arise out of the failure of the part of the Permittee to properly perform the work provided under this permit. In the event any claim of such liability is made against the County of San Joaquin or any department, official or employee thereof, the Permittee shall defend, indemnify, and hold each of them harmless for such claim.

10. All backfill material is to be moistened as necessary and thoroughly compacted with mechanical means. If required by the County Director of Public Works, such backfill shall consist of gravel or crushed rock. The Permittee shall maintain the surface over structures placed hereunder as may be necessary to insure the return of the roadway to a completely stable condition and until relieved of such responsibility by the County Department of Public Works. Wherever a gravel, crushed rock or asphalt surface is removed or damaged in the course of work related to the permitted encroachment, such material shall either be separately stored and replaced in the roadway as nearly as possible in its original state or shall be replaced in kind, and the roadway shall be left in at least as good a condition as it was before the commencement of operations of placing the encroachment structure.

11. Whenever it becomes necessary to secure permission from abutting property owners for the proposed work, such authority must be secured by the Permittee prior to starting work.

12. The current and future safety and convenience of the traveling public shall be given every consideration in the location and methods of construction utilized.

13. The Permittee is responsible for the preservation of survey monuments located within the area of work herein permitted. Prior to the start of construction, survey monuments that potentially may be disturbed shall be located and referenced by a Licensed Land Surveyor, and a Corner Record filed with the County Surveyor. Any Survey Monuments disturbed during the course of construction shall be reestablished by a Licensed Land Surveyor and another Corner Record filed with the County Surveyor. (Land Surveyors' Act Section 8771)

14. Prior to any excavation, the Permittee shall notify USA North (Underground Service Alert of Northern California and Nevada) at 811 or 800-227-2600 forty-eight (48) hours in advance.

APPLICATION FOR ENCROACHMENT PERMIT

PLEASE PRINT:

#8258

Date 8/5/15

To: San Joaquin County
Department of Public Works

CALIFORNIA WATER SERVICE
(Applicant Name)

1602 E. LAFAYETTE ST
(Mailing Address)

STOCKTON CA 95205
(City, State, Zip Code)

(209) 464-8311
(Area Code - Telephone Number)

OFFICE USE ONLY

JOB # P08738077 REF #
APN CR #
EXP. DATE 9-15-2015
VALID 9-1-2015 TO 9-15-2015 DRIVEWAYS:
STREET Mariposa Rd. *
AREA Stockton QUAD SE *
TYPE Bellhole, Bore *
FORMS SS/WW, R29
NOTES

Sketch (Detailed plans may be submitted)

See Attached

The undersigned hereby applies for permission to excavate, construct and/or otherwise encroach on County Highway Right-of-Way on the North side of Mariposa Rd approximately _____ feet/mile _____ of _____, _____, by performing the following work (description of work):

3800 E Mariposa Rd
Install 10" Fire Service
1 cut: 3'x60'

Acct 103000
W.O. 00102837
Act ID 3450-10-I

Work will commence on or about 8/6/15 (11/1/15) for approximately 60 days.

I, the undersigned, certify that I am the owner of the respective property, or am qualified to represent the owner and agree to do the work described above in accordance with the rules and regulations of San Joaquin County and subject to inspection and approval.

Stacie Allen - Operations Clerk 8/5/15
Signature of Applicant - Title Date

DEPARTMENT OF TRANSPORTATION
CENTRAL REGION CONSTRUCTION
3663 ARCH ROAD CONSTRUCTION OFFICE
STOCKTON, CA 95215
PHONE (559) 341-2018

Flex your power!
Be energy efficient!

August 28, 2015

10-3A1004
SJ-4, 99 –R19.5/R20.1, 15.0/18.6
South Stockton Project
ID # 1000000409

James Hart
San Joaquin County Public Works
1810 East Hazelton Ave.
Stockton, CA 95205

SUBJECT: Oldcastle Precast Sewer Line Installation (Update Revision)

Dear James Hart:

Caltrans has approved Oldcastle Precast to install their sewer line tie-in on Mariposa Road, just east of Stagecoach Road. Although the first layer of asphalt has been put down, the paving is not to final lift. The sewer line may be trenched by saw cutting the existing HMA and stage traffic onto the new paving area on the south side of Mariposa. After the sewer line is installed, Oldcastle Precast will provide a suitable backfill and match the structure section to the existing. The final overlay of Mariposa Road at Stagecoach Road is scheduled for October 2015.

If you have any questions or concerns, please do not hesitate to contact me.
Sincerely,

Troy Scheiber
Resident Engineer

c: File 5.3

Scheiber, Troy@DOT

From: Thomson, Cy <Cy.Thomson@oldcastle.com>
Sent: Thursday, August 27, 2015 5:13 PM
To: Scheiber, Troy@DOT
Cc: Jim Haley (jim@haleycontracting.com)
Subject: RE: Old Castle Sewer Line Installation

Troy,

The City is making us tie into another sewer manhole. The MH is right in the middle of the 2 lanes of Mariposa a little east of Stagecoach. The traffic plan is to divert traffic onto the new asphalt while we cut through the active 2 lanes.

The county wants to know that Cal Trans is OK with us doing that and of course wants a letter from you stating just that. Also need to mention that you will not be paving till the end of September., Your last letter stated just September 2015
and they wanted to know if I was sure that wasn't next week.

As soon as I get this letter we can get the EP and put this behind us.

Thanks very much for all your help.

Cy

Cy Thomson
VP / GM | Oldcastle Precast | **P**: 209-235-1159 | **C**: 209-608-8740

From: Scheiber, Troy@DOT [mailto:troy.scheiber@dot.ca.gov]
Sent: Thursday, July 02, 2015 1:52 PM
To: Mavalencia@sjgov.org; Thomson, Cy
Cc: jhart@sjgov.org; Irahola, Kevin@DOT
Subject: Old Castle Sewer Line Installation

Cy, the letter you requested.

Troy

Table 6H-1(CA). Index to Typical Applications

Typical Application Description	Typical Application Number
Work affecting Pedestrian and Bicycle Facilities (see Section 6G.05)	
Shoulder Closure on Urban (Low Speed) Locations to Accommodate Bicyclists	TA-101(CA)
Lane Closure on Freeway, Expressway, Rural and Urban (High Speed) Locations to Accommodate Bicyclists	TA-102(CA)
Detour for Bike Lane on Roads with Closure of One Travel Direction	TA-103(CA)
Right Lane and Bike Lane Closure on Far Side of Intersection	TA-104(CA)
Work Within the Traveled Way of a Two-Lane Highway (see Section 6G.10)	
Lane Shift on Road with Low Traffic Volumes	TA-105(CA)

Table 6H-2. Meaning of Symbols on Typical Application Diagrams

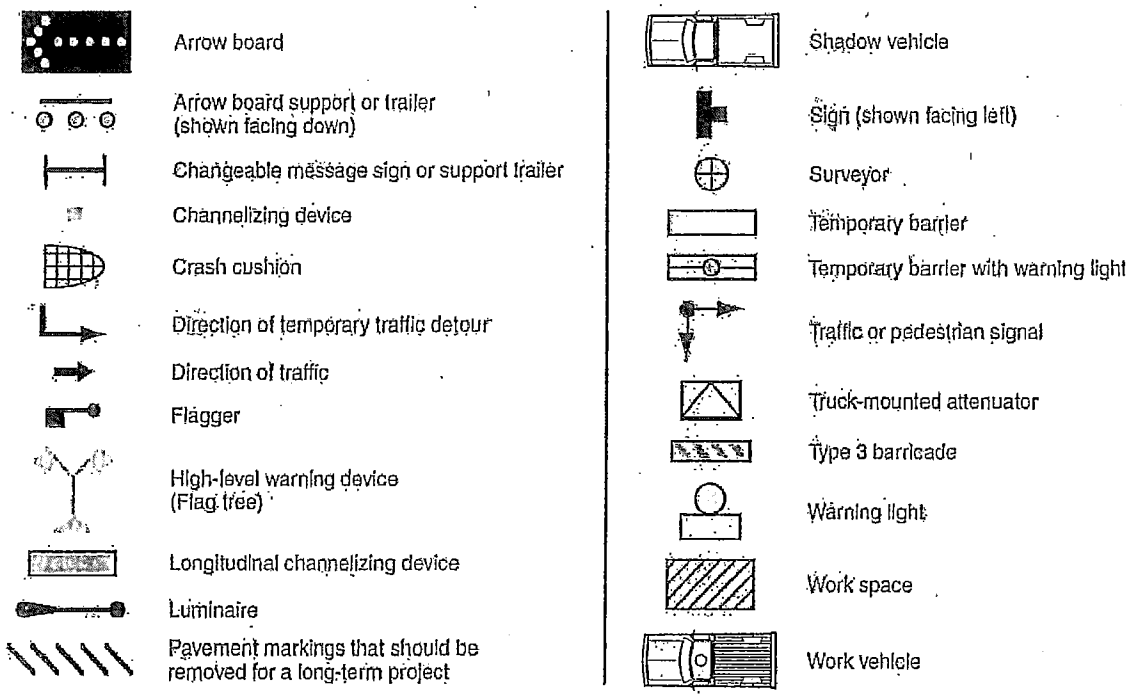

Table 6H-3. Meaning of Letter Codes on Typical Application Diagrams

Road Type	Distance Between Signs**		
	A	B	C
Urban (low speed)* - 25 mph or less	100 feet	100 feet	100 feet
Urban (low speed)* - more than 25 mph to 40 mph	250 feet	250 feet	250 feet
Urban (high speed)* - more than 40 mph	350 feet	350 feet	350 feet
Rural	500 feet	500 feet	500 feet
Expressway / Freeway	1,000 feet	1,500 feet	2,640 feet

* ~~Speed category to be determined by highway agency.~~

** The column headings A, B, and C are the dimensions shown in Figures 6H-1 through 6H-46. The A dimension is the distance from the transition or point of restriction to the first sign. The B dimension is the distance between the first and second signs. The C dimension is the distance between the second and third signs. (The "first sign" is the sign in a three-sign series that is closest to the TTC zone. The "third sign" is the sign that is furthest upstream from the TTC zone.)

Table 6H-4. Formulas for Determining Taper Length

Speed (S)	Taper Length (L) in feet
40 mph or less	$L = \frac{WS^2}{60}$
45 mph or more	$L = WS$

Where: L = taper length in feet
W = width of offset in feet
S = posted speed limit, or off-peak 85th-percentile speed prior to work starting, or the anticipated operating speed in mph

Table 6H-4(CA). Taper Length Criteria for Temporary Traffic Control Zones (for 12 feet Offset Width)

Speed* S (mph)	Minimum Taper Length** for Width of Offset 12 feet (W)			
	Merging L (feet)	Shifting L/2 (feet)	Shoulder L/3 (feet)	Down Stream (feet)***
20	80	40	27	50
25	125	63	42	50
30	180	90	60	50
35	245	123	82	50
40	320	160	107	50
45	540	270	180	50
50	600	300	200	50
55	660	330	220	50
60	720	360	240	50
65	780	390	260	50
70	840	420	280	50

* - Posted speed limit, off-peak 85th-percentile speed prior to work starting, or the anticipated operating speed in mph.

** - For other offsets use the following merging taper length formula for L:
For speeds of 40 mph or less, $L=WS^2/60$
For speeds of 45 mph or more, $L=WS$

Where:
L = taper length in feet
W = width of offset in feet
S = posted speed limit, off-peak 85th-percentile speed prior to work starting, or the anticipated operating speed in mph

*** - Maximum downstream taper length is 100 feet. See Section 6C.08.

Notes for Figure ~~6H-10~~ 6H-10(CA) —Typical Application 10 Lane Closure on a Two-Lane Road Using Flaggers

Option:

1. For low-volume situations with short work zones on straight roadways where the flagger is visible to road users approaching from both directions, a single flagger, positioned to be visible to road users approaching from both directions, may be used (see Chapter 6E).
2. The ROAD WORK AHEAD and the END ROAD WORK signs may be omitted for short-duration operations.
3. Flashing warning lights and/or flags may be used to call attention to the advance warning signs.

A BE PREPARED TO STOP sign may be added to the sign series.

Guidance:

4. *The buffer space should be extended so that the two-way traffic taper is placed before a horizontal (or crest vertical) curve to provide adequate sight distance for the flagger and a queue of stopped vehicles.*

Standard:

5. **At night, flagger stations shall be illuminated, except in emergencies.**

Guidance:

6. *When used, the BE PREPARED TO STOP sign should be located ~~between~~ after the Flagger sign and the ONE LANE ROAD sign.*
7. *When a grade crossing exists within or upstream of the transition area and it is anticipated that queues resulting from the lane closure might extend through the grade crossing, the TTC zone should be extended so that the transition area precedes the grade crossing.*
8. *When a grade crossing equipped with active warning devices exists within the activity area, provisions should be made for keeping flaggers informed as to the activation status of these warning devices.*
9. *When a grade crossing exists within the activity area, drivers operating on the left-hand side of the normal center line should be provided with comparable warning devices as for drivers operating on the right-hand side of the normal center line.*
10. *Early coordination with the railroad company or light rail transit agency should occur before work starts.*

Option:

11. A flagger or a uniformed law enforcement officer may be used at the grade crossing to minimize the probability that vehicles are stopped within 15 feet of the grade crossing, measured from both sides of the outside rails.

Support:

12. For State highways, see Department of Transportation's Standard Plan T13. See Section 1A.11 for information regarding this publication.

Figure 6H-10 (CA). Lane Closure on Two-Lane Road Using Flaggers (TA-10)

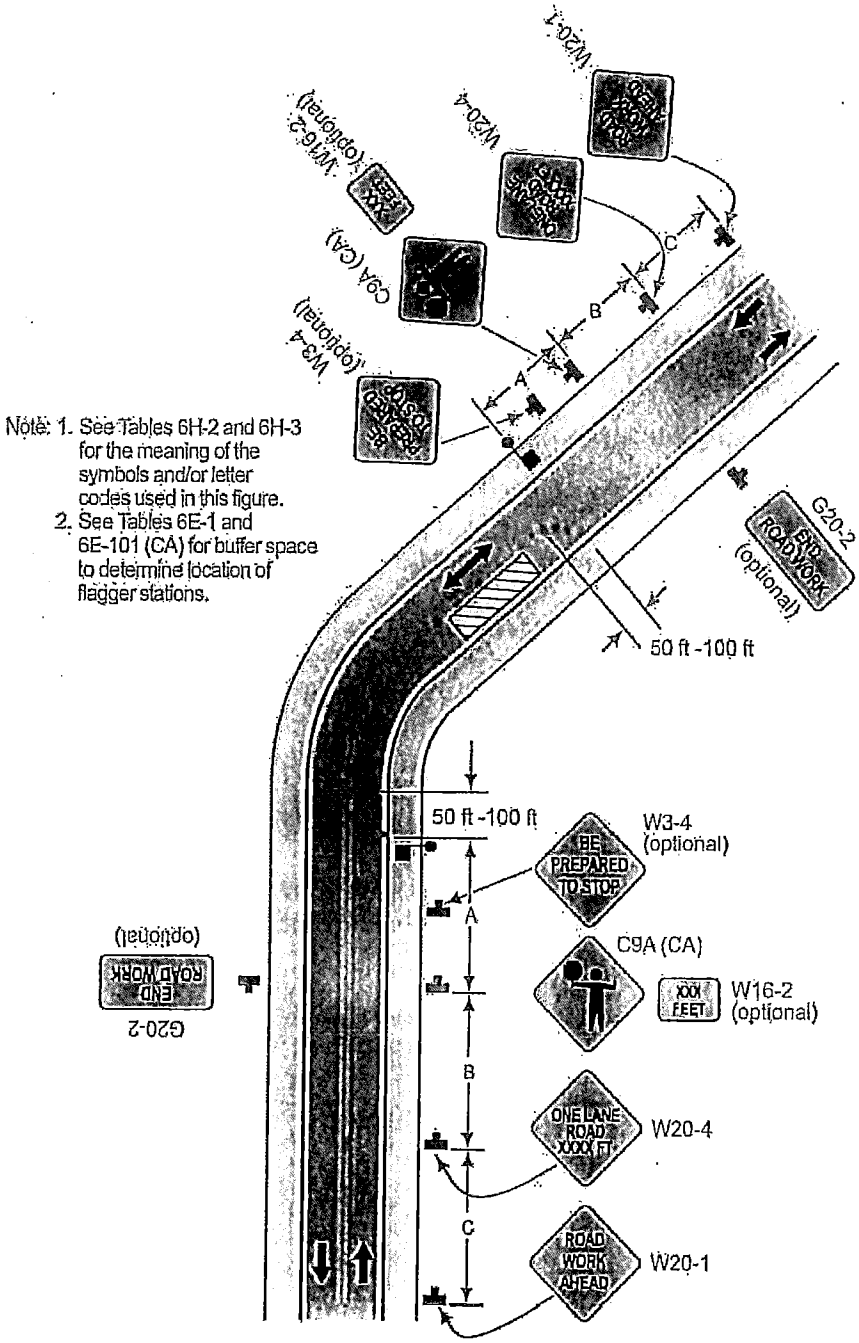

Typical Application 10

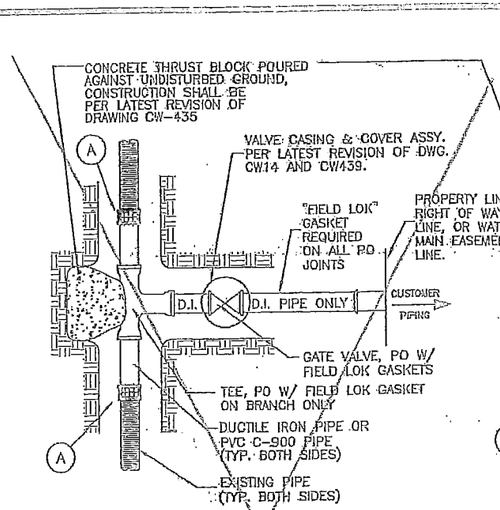

STANDARD INSTALLATION

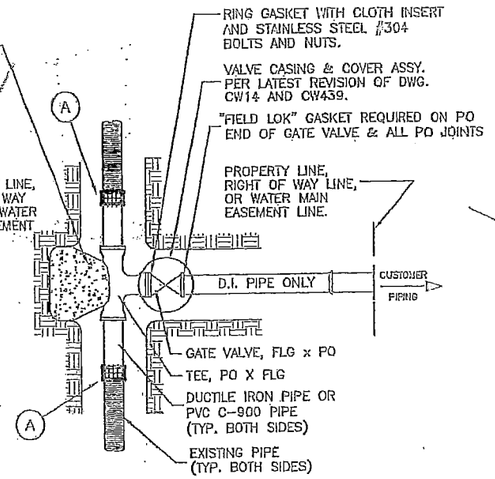

ALTERNATE INSTALLATION

TYPICAL MATERIALS FOR ____ INCH FIRE SERVICE:

1 – ___" X ___" TEE PO CL DI
1 – ___" GATE VALVE PO NRS NO RS
1 – VALVE CASING AND COVER ASSEMBLY
___ – FEET OF ___" DUCTILE IRON PIPE (FOR TEE RUN)
OR
___ – FEET OF ___" PVC C-900 PIPE (FOR TEE RUN)
___ – 20" POLYWRAP TUBING 8 MIL W/PVC TAPE
___ – ___" "FIELD LOK" GASKET F/PO
___ – FEET OF ___" DUCTILE IRON PIPE (FOR FIRE SERVICE RUN)
___ – ___" COUPLING _____
___ – ___" SOLID SLEEVE MJ
___ – ___" PVC CLOSURE COUPLING

TYPICAL MATERIALS FOR 10 INCH FIRE SERVICE:

1 – 10" x 10" TEE PO X ~~FLG-CL-DI~~ TAPPING SLEEVE
1 – 10" GATE VALVE FLG X ~~PO-NRS-NO-RS~~ AWT
1 – VALVE CASING AND COVER ASSEMBLY
___ – FEET OF ___" DUCTILE IRON PIPE (FOR TEE RUN)
OR
___ – FEET OF ___" PVC C-900 PIPE (FOR TEE RUN)
1 – GAL METAL GUARD #301
1 – ROLL BIT OR RES WRAP
130' – 20" POLYWRAP TUBING 8 MIL W/PVC TAPE
___ – ___" "FIELD LOK" GASKET F/PO
100 – FEET OF DUCTILE IRON PIPE (FOR FIRE SERVICE RUN)
___ – ___" COUPLING _____
___ – ___" SOLID SLEEVE MJ
___ – ___" PVC CLOSURE COUPLING

FLANGE MATERIAL – CHECK ONE BOX

☐ 1 – 4" FLANGE TYTE GASKET
8 – 5/8" ø x 3" #304 SS MACHINE BOLTS W/ HN

☐ 1 – 6" FLANGE TYTE GASKET
8 – 3/4" ø x 3-1/2" #304 SS MACHINE BOLTS W/ HN

☐ 1 – 8" FLANGE TYTE GASKET
8 – 3/4" ø x 3-1/2" #304 SS MACHINE BOLTS W/ HN

☒ 1 – 10" FLANGE TYTE GASKET
12 – 7/8" ø x 4" #304 SS MACHINE BOLTS W/ HN

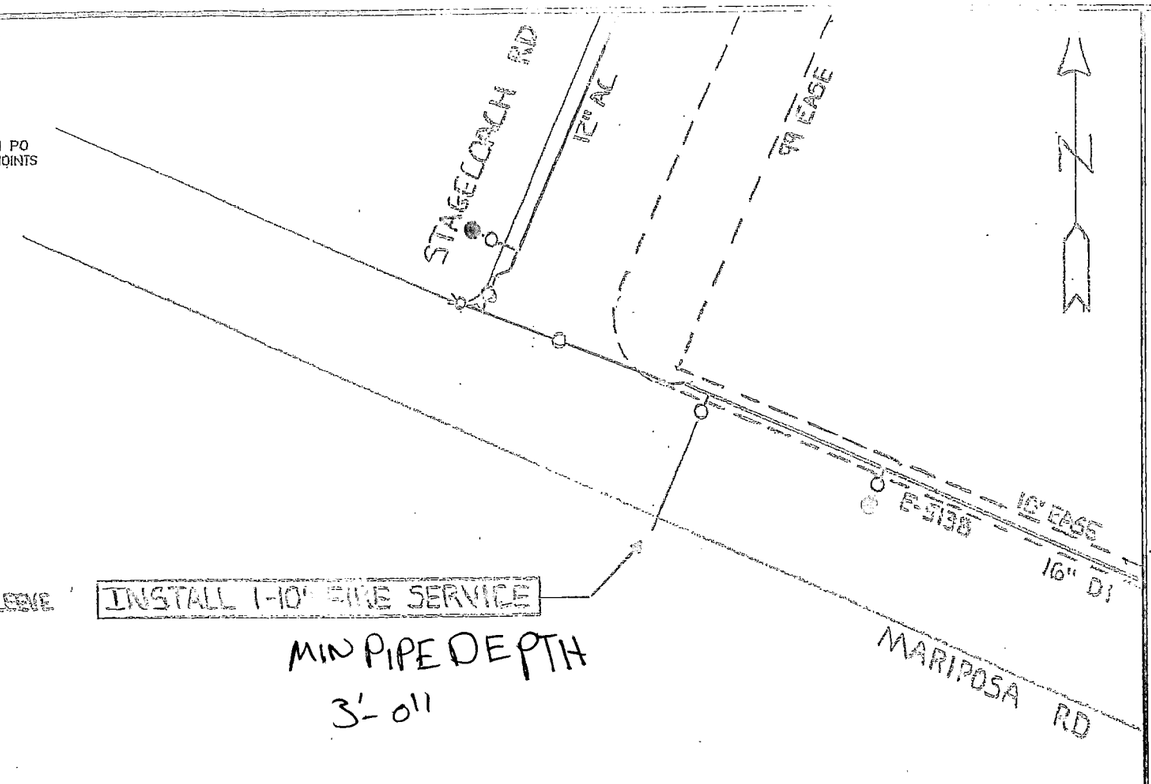

PLAN

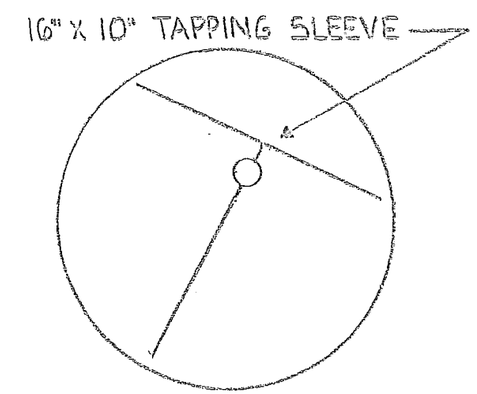

DETAIL

MATERIAL FOR ITEM Ⓐ (EITHER INSTALLATION)

TIE-INS FROM D.I. TO D.I. OR PVC C-900 OR ACME(<10"DIA.) USE SOLID SLEEVE MJ
TIE-INS FROM D.I. TO CI
USE SOLID SLEEVE MJ DUAL PURPOSE

TIE-INS FROM D.I. TO ACRB (ASBESTOS CEMENT ROUGH BARREL)
USE ACRB X DI FLEX. COUPLING (10" SLEEVE IF STEEL OR STANDARD SLEEVE IF DUCTILE IRON).

TIE-INS FROM D.I. TO OD STEEL
USE OD STEEL X DI FLEX. COUPLING (10" SLV IF STL OR STD SLV IF D.I.)

TIE-INS FROM D.I. TO STD STEEL
USE STD X DI FLEX. COUPLING (10" SLV IF STL OR STD SLV IF D.I.)

TIE-INS FROM PVC C-900 TO PVC C-900
USE "CERTAINTEED" PVC CLOSURE COUPLING

NOTES:

1. A DOUBLE CHECK VALVE OR REDUCED PRESSURE PRINCIPLE BACKFLOW PREVENTION ASSEMBLY IS REQUIRED.

2. POLYETHYLENE ENCASEMENT WITH PVC TAPE IS REQUIRED FOR ALL DUCTILE IRON PIPE AND ALL FITTINGS.

3. PROTECT ALL UNDERGROUND BOLTS, NUTS, FLEX. COUPLINGS, AND BARE STEEL PER C.W.S. CO. PROTECTION COATING SPECIFICATIONS.

4. BLOCK AND POUR CONCRETE THRUST BLOCKS ON ALL ELLS, TEES, AND CAPS, PER LATEST REVISION OF DRAWING CW-435.

5. THE USE OF "FIELD LOK" GASKETS DOES NOT ELIMINATE THE NEED FOR CONCRETE THRUST BLOCKS.

NOTE: APPLICANT IS REQUIRED TO INSTALL THE FOLLOWING BACKFLOW PROTECTION ASSEMBLY:

ABOVE GROUND DOUBLE CHECK DETECTOR ASSEMBLY

ENGINEERING

CALIFORNIA WATER SERVICE CO.

DEPARTMENT

REVISIONS:
R1. CHANGED NOTES & TJ FITTINGS TO PO 1/17/03 VK
R2. CHANGED NOTES & STD INSTALLATION 6/15/09 MF

PLAT SHEET: STK 37-34

SCALE: 1" = 100'

DRAWN BY: LECHICH

FORM APPROVED BY: 6/11/2009

CHECKED BY: DATE:

APPROVED BY: DATE:

		DATE:	INIT.
DISTRIBUTION MAP	X		
PLAT MAP	X		
SYSTEM SCHEMATIC	☐		
STATION SCHEMATIC	☐		
ZONE MAP	☐		
VALVE RECORD	☐		

TITLE:
INSTALL 10" PRIVATE FIRE SERVICE AT LOCATION:
3800 E MARIPOSA RD

DISTRICT: 119

STOCKTON

DATE: 6/11/15

PROJECT NO. 00102837

DRAWING NO.:

SHT 02

CADD FILE NO: FS-SHT.DWG